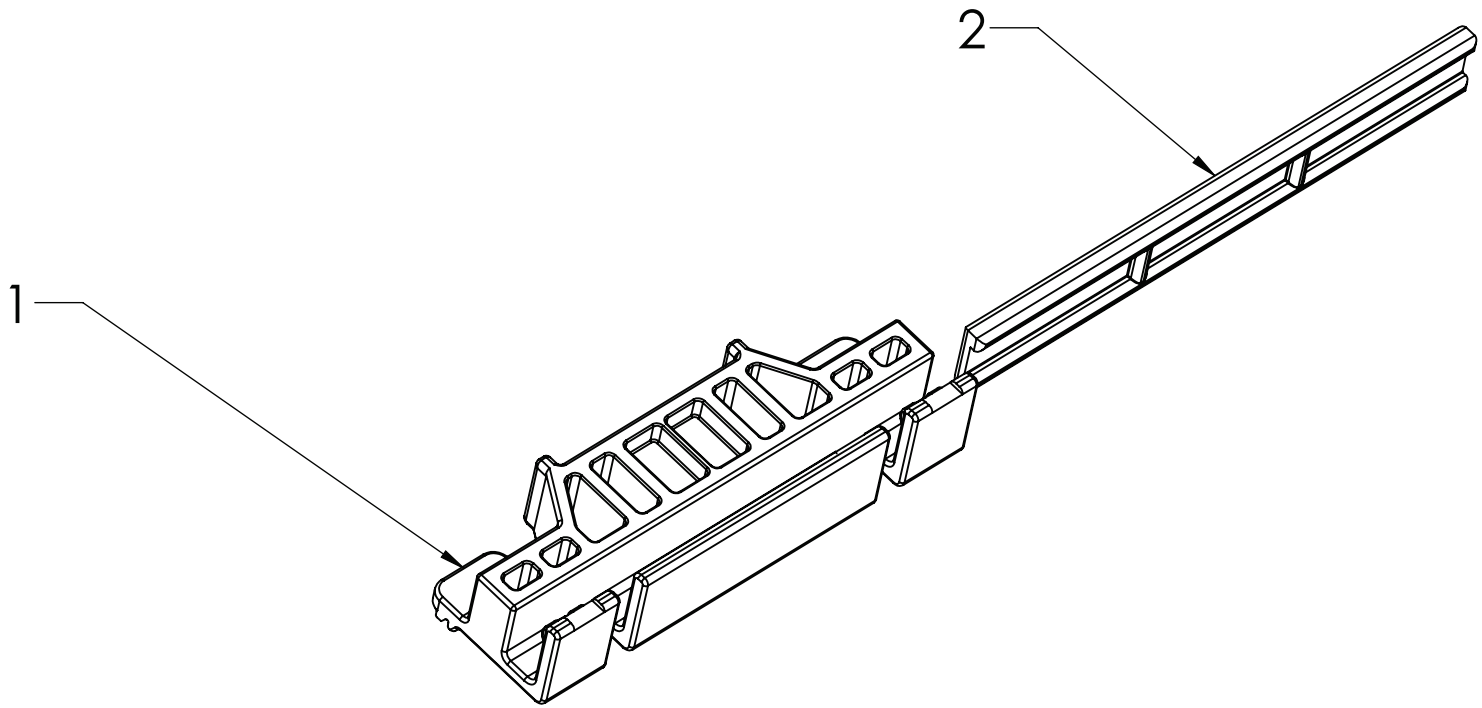

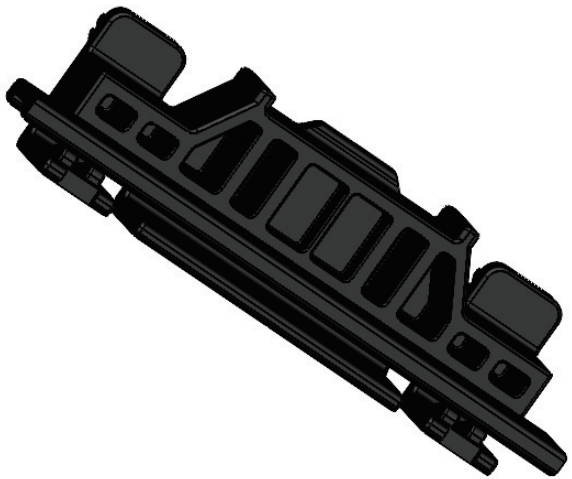

UNLESS OTHERWISE SPECIFIED: DIMENSIONS ARE IN MILLIMETERS SURFACE FINISH: TOLERANCES: LINEAR: ANGULAR:		FINISH:				DEBURR AND BREAK SHARP EDGES	DO NOT SCALE DRAWING	REVISION
	NAME	SIGNATURE	DATE				TITLE:	
DRAWN							Tension Clamps	
CHK'D								
APPV'D								
MFG								
Q.A				MATERIAL:			DWG NO. **ADDA-110226**	A4
				WEIGHT:	15 g		SCALE:1:1	SHEET 1 OF 1

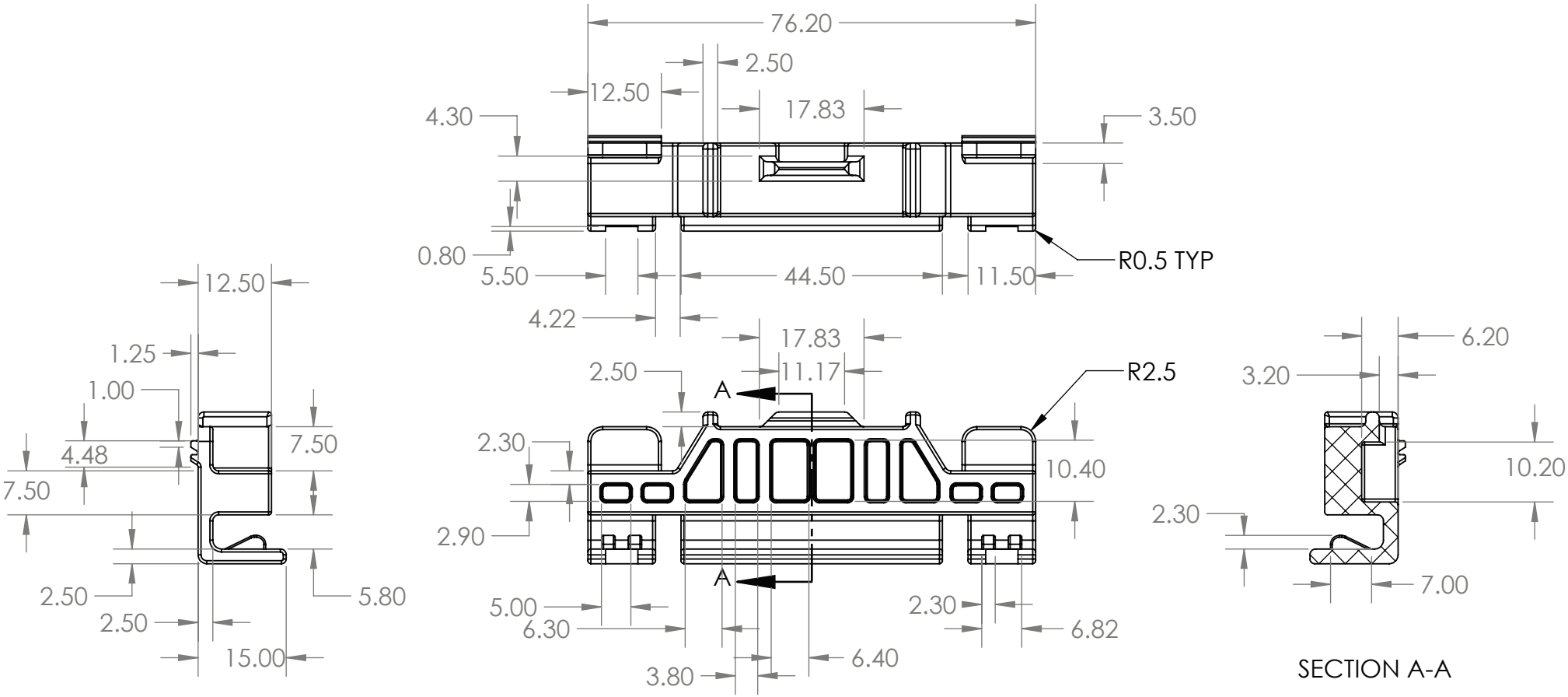

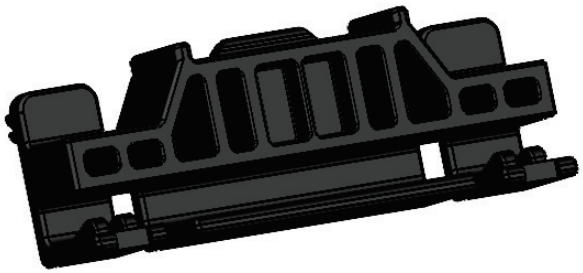

UNLESS OTHERWISE SPECIFIED: DIMENSIONS ARE IN MILLIMETERS SURFACE FINISH: TOLERANCES: LINEAR: ANGULAR: +/- 0.5	FINISH: Unknown TBD by customer				DEBURR AND BREAK SHARP EDGES	DO NOT SCALE DRAWING / REVISION
	NAME	SIGNATURE	DATE			TITLE: Tension Clamps
DRAWN						
CHK'D						
APPV'D						
MFG						
Q.A				MATERIAL: Unknown. Proposed material: ABS (Subject to customer approval)		DWG NO. **ADDA-110226_1** / A4
				WEIGHT: 13 g		SCALE:1:1 / SHEET 1 OF 1

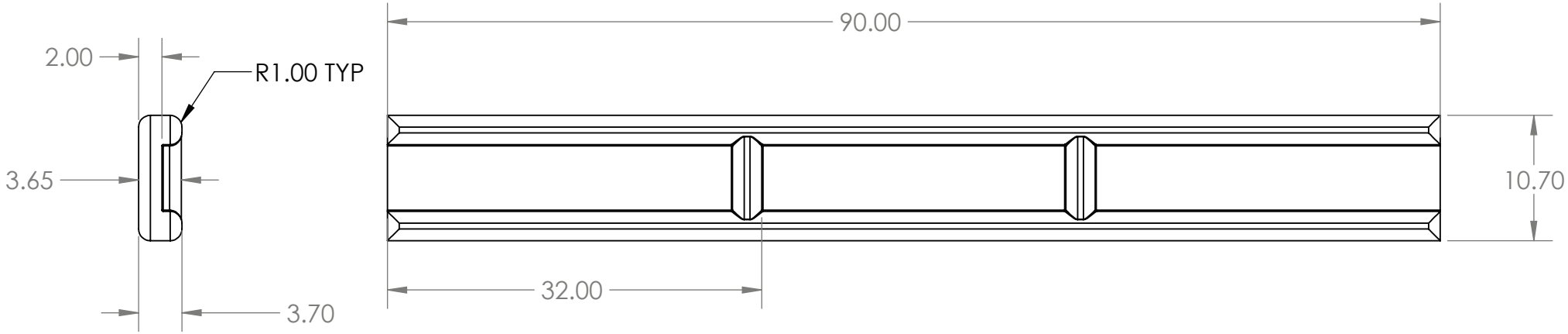

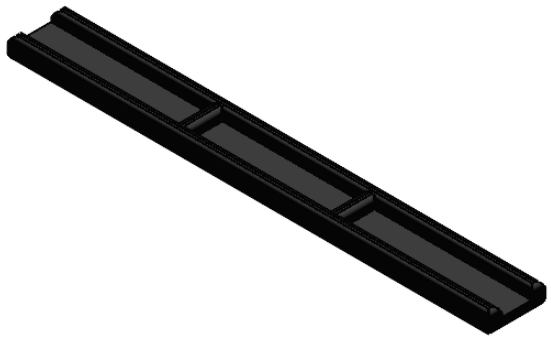

UNLESS OTHERWISE SPECIFIED: DIMENSIONS ARE IN MILLIMETERS SURFACE FINISH: TOLERANCES: LINEAR: +/- 0.2 ANGULAR:	FINISH:				DEBURR AND BREAK SHARP EDGES	DO NOT SCALE DRAWING / REVISION
	NAME	SIGNATURE	DATE			TITLE:
DRAWN						
CHK'D						
APPV'D						
MFG						
Q.A				MATERIAL:		DWG NO. **ADDA-110226_2** A4
				WEIGHT: 2 g		SCALE:2:1 SHEET 1 OF 1